NORTHERN WOLVES AIR CONDITIONING

SUBMITTAL TRANSMITTAL

Project:	Saddle River Day School	**Submittal No:**	030
Location:	147 Chestnut Ridge Rd., Saddle River, NJ 07458	**Spec Section:**	230529
Engineer:	Johnson & Urban, 295 Route 34 Colts Neck, NJ 07722	**Date:**	03/22/2026
Architect:	DIGroup Architecture	**Project No:**	DIG #22.036

EQUIPMENT/MATERIAL SUBMITTED:

Concrete screw anchors for HVAC equipment and piping support attachment to concrete structure. DeWalt Hangermate+ self-tapping concrete anchors, 1/4" to 1/2" sizes, carbon steel zinc plated.

Product	Size Range	Material	Approval
DeWalt Hangermate+	1/4"	Carbon Steel Zinc	ICC-ES ESR
DeWalt Hangermate+	3/8"	Carbon Steel Zinc	ICC-ES ESR
DeWalt Hangermate+	1/2"	Carbon Steel Zinc	ICC-ES ESR

COMPLIANCE NOTES:

- ICC-ES evaluated per AC193 and AC308
- Compliant with IBC 2021 and ACI 318-19 Chapter 17
- Seismic qualified for Seismic Design Categories A through F
- Carbon steel with zinc plating per project requirements
- Load ratings per ICC-ES Evaluation Report
- Compliant with Section 230529 - Hangers and Supports

NOTES:

Anchor selection based on load requirements and base material. Install per manufacturer's instructions with required embedment depth and edge/spacing distances.

Submitted By: Northern Wolves Air Conditioning
Email: ruslan@northernwolvesac.com

INSTALLATION SPECIFICATIONS

Installation Specifications for Hangermate+ in Concrete and Supplementary Information[1,2]

Anchor Property/Setting Information		Notation	Units	Nominal Anchor Diameter (inch)						
				1/4	3/8		3/8		3/8	1/2
Coupler thread size (UNC)		-	in.	1/4-20	3/8-16		3/8-16		3/8-16	1/2-13
Coupler head style		-	-	Internal Thread	Internal Thread		External Thread		Internal Thread	Internal Thread
Nominal anchor diameter (screw anchor body)		d_a	in. (mm)	0.250 (6.4)	0.250 (6.4)		0.250 (6.4)		0.375 (9.5)	0.375 (9.5)
Nominal drill bit diameter (ANSI)		d_{bit}	in.	1/4	1/4		1/4		3/8	3/8
Minimum nominal embedment depth[4]		h_{nom}	in. (mm)	1-5/8 (41)	1-5/8 (41)	2-1/2 (64)	1-5/8 (41)	2-1/2 (64)	2 (51)	2 (51)
Effective embedment		h_{ef}	in. (mm)	1.20 (30)	1.20 (30)	1.94 (49)	1.20 (30)	1.94 (49)	1.33 (33)	1.33 (33)
Minimum hole depth		h_o	in. (mm)	2 (51)	2 (51)	2-7/8 (73)	2 (51)	2-7/8 (73)	2-3/8 (60)	2-3/8 (60)
Minimum concrete member thickness		h_{min}	in. (mm)	3-1/4 (83)	3-1/4 (83)	4 (102)	3-1/4 (83)	4 (102)	3-1/2 (89)	3-1/2 (89)
Minimum edge distance[3]		c_{min}	in. (mm)	1-1/2 (38)	1-1/2 (38)		1-1/2 (38)		c_{min} = 1-1/2 (38) for $s_{min} \geq$ 3 (76); s_{min} = 2 (51) for $c_{min} \geq$ 2 (51)	c_{min} = 1-1/2 (38) for $s_{min} \geq$ 3 (76); s_{min} = 2 (51) for $c_{min} \geq$ 2 (51)
Minimum spacing distance[3]		s_{min}	in. (mm)	1-1/2 (38)	1-1/2 (38)		1-1/2 (38)			
Nominal anchor length[6]		l_{anch}	in.	1-5/8	1-5/8	2-1/2	1-5/8	2-1/2	2	2
Maximum impact wrench power (torque)[1]		$T_{impact,max}$	ft.-lbf. (N-m)	150 (203)	150 (203)		150 (203)		300 (407)	300 (407)
Maximum manual installation torque		$T_{inst,max}$	ft.-lbf. (N-m)	19[3] (26)	19[3] (26)	25 (34)	19[3] (26)	25 (34)	25 (34)	25 (34)
Coupler Head	Wrench socket size	-	in.	3/8	1/2		1/2		1/2	11/16
	Max. head height	-	in.	33/64	43/64		1-3/16		43/64	53/64
	Max. washer diameter	-	in.	1/2	21/32		21/32		21/32	31/32
Effective tensile stress area (screw anchor body)		A_{se}	in.² (mm²)	0.045 (28.8)	0.045 (28.8)		0.045 (28.8)		0.094 (60.7)	0.094 (60.7)
Minimum specified ultimate strength		f_{uta}	psi (N/mm²)	115,000 (793)	115,000 (793)		115,000 (793)		100,000 (690)	100,000 (690)
Minimum specified yield strength		f_y	psi (N/mm²)	92,000 (634)	92,000 (634)		92,000 (634)		80,000 (552)	80,000 (552)
Mean axial Stiffness[7]	Uncracked concrete	β_{uncr}	lbf/in.	1,381,000	1,381,000		1,381,000		1,157,000	1,157,000
	Cracked concrete	β_{cr}	lbf/in.	318,000	318,000		318,000		330,000	330,000

For SI: 1 inch = 25.4 mm, 1 ft-lb = 1.356 N-m, 1 psi = 0.0069 N/mm² (MPa).

1. The information presented in this table is used in conjunction with the design criteria of ACI 318 (-19 or -14) Chapter 17 or ACI 318-11 Appendix D, as applicable.
2. For installations through the soffit of steel deck assemblies into concrete, see the design information table for installation in the soffit of concrete-filled steel deck assemblies and the installation details in the soffit of concrete over steel deck for the applicable steel deck profile.
3. For installations into lightweight concrete, the max installation torque, $T_{inst,max}$, is 18 ft.-lb for nominal 1/4-inch-diameter anchors (screw anchor body diameter) with an 1-5/8-inch nominal embedment.
4. The embedment depth, h_{nom}, is measured from the outside surface of the concrete member to the embedded end of the anchor.
5. Additional combinations for minimum edge distance, c_{min}, and minimum spacing distance, s_{min}, may be derived by linear interpolation between the given boundary values for the nominal 3/8-inch-diameter anchors (screw anchor body diameter).
6. The listed anchor length is based on coupler head anchor sizes commercially available at the time of publication compared with the requirements to achieve the minimum nominal embedment depth. The nominal anchor length is measured from under the coupler head to the tip of the anchor.
7. Mean values shown, actual stiffness varies considerably depending on concrete strength, loading and geometry of application.

Hangermate+ Anchor Detail in Concrete

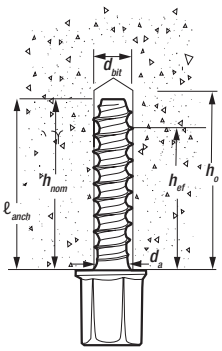

Internally Threaded Version

Nomenclature

d_a = Anchor diameter (screw anchor body)
d_{bit} = Diameter of Drill Bit
h_{nom} = Minimum Nominal Embedment
h_{ef} = Effective Embedment
h_o = Minimum Hole Depth
ℓ_{anch} = Nominal Anchor Length

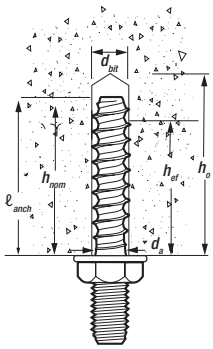

External Thread Version

TECHNICAL GUIDE – MECHANICAL ANCHORS ©2022 DEWALT – REV.1

INSTALLATION INSTRUCTIONS

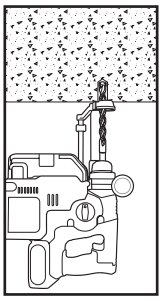

Step 1
Using the proper drill bit size, drill a hole into the base material to the required depth. The tolerances of the drill bit used should meet the requirements of ANSI Standard B212.15.

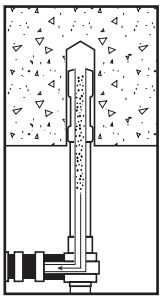

Step 2
Remove dust and debris from hole during drilling (e.g. dust extractor, hollow bit) or following drilling (e.g. suction, forced air) to extract loose particles created during drilling.

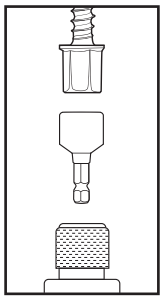

Step 3
Select a powered impact wrench or torque wrench and do not exceed the maximum torque, $T_{impact,max}$ or $T_{inst,max}$, repectively, for the selected anchor diameter and embedment (See Table 1). Attach an appropriate sized hex socket to the wrench. Mount the screw anchor head into the socket.

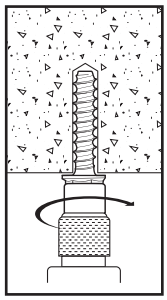

Step 4
Drive the anchor with an impact wrench or torque wrench through the fixture and into the hole until the head of the anchor comes into contact with the member surface. Do not spin the hex socket off the anchor to disengage. Insert threaded rod or threaded bolt element into Hangermate+.

Hangermate+ Installation Detail for Screw Anchors in the Soffit of Concrete over Steel Deck Floor and Roof Assemblies, 3-inch Deep Deck Profile[1,2,3]

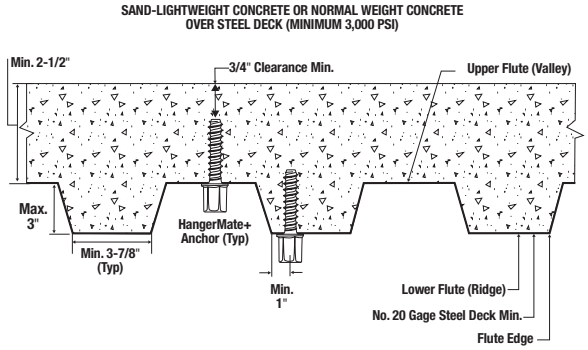

1. Anchors may be placed in the upper flute or lower flute of the concrete-filled steel deck profiles provided the minimum hole clearance of 3/4-inch is satisfied for the selected anchor. See the Tension and Shear Design information for Anchors Installed in the Soffit of Concrete-Filled Steel Deck Assemblies table.
2. Anchors in the lower flute may be installed with a maximum 15/16-inch offset in either directions from the center of the flute. The offset distance may be increased proportionally for profiles with lower flute widths greater than those shown provided the minimum lower flute edge distance is also satisfied (e.g. 1-1/4-inch offset for 4-1/2-inch wide flute).
3. See the Tension and Shear Design information for Anchors Installed in the Soffit of Concrete-Filled Steel Deck Assemblies table for design data.

Hangermate+ Installation Detail for Screw Anchors in the Soffit of Concrete over Steel Deck Floor and Roof Assemblies, 1-1/2-inch Deep Deck Profile[1,2,3]

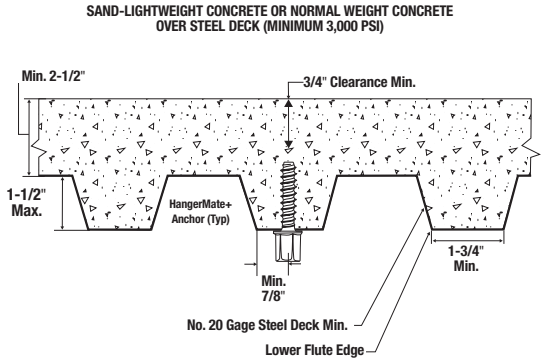

1. Anchors may be placed in the upper flute or lower flute of the concrete-filled steel deck profiles provided the minimum hole clearance of 3/4-inch is satisfied for the selected anchor. See the Tension and Shear Design information for Anchors Installed in the Soffit of Concrete-Filled Steel Deck Assemblies table.
2. Anchors in the lower flute may be installed in the center of the flute. An offset distance may be given proportionally for profiles with flute widths greater than those shown provided the minimum lower flute edge distance is also satisfied.
3. See the Tension and Shear Design information for Anchors Installed in the Soffit of Concrete-Filled Steel Deck Assemblies table for design data.

TECHNICAL GUIDE – MECHANICAL ANCHORS ©2022 DEWALT – REV. I

PERFORMANCE DATA (ASD)

Ultimate Load Capacities for Hangermate+ in Normal-Weight Concrete[1,2,3]

Nominal Anchor Size in.	Nominal Anchor Diameter (screw anchor body) in.	Minimum Nominal Embedment Depth in. (mm)	Minimum Concrete Compressive Strength									
			f'c = 2,500 psi (17.3 MPa)		f'c = 3,000 psi (20.7 MPa)		f'c = 4,000 psi (27.6 MPa)		f'c = 6,000 psi (41.4 MPa)		f'c = 8,000 psi (55.2 MPa)	
			Tension lbs (kN)	Shear lbs (kN)	Tension lbs (kN)	Shear lbs (kN)	Tension lbs (kN)	Shear lbs (kN)	Tension lbs (kN)	Shear lbs (kN)	Tension lbs (kN)	Shear lbs (kN)
1/4	1/4	1-5/8 (41)	2,410 (10.7)	1,485 (6.6)	2,545 (11.3)	1,525 (6.8)	2,775 (12.3)	1,525 (6.8)	2,775 (12.3)	1,525 (6.8)	2,775 (12.3)	1,525 (6.8)
3/8	1/4	1-5/8 (41)	2,410 (10.7)	1,555 (6.9)	2,545 (11.3)	1,565 (7.0)	2,775 (12.3)	1,565 (7.0)	2,775 (12.3)	1,565 (7.0)	2,775 (12.3)	1,565 (7.0)
		2-1/2 (64)	3,650 (16.2)	1,555 (6.9)	3,855 (17.1)	1,565 (7.0)	4,200 (18.7)	1,565 (7.0)	4,270 (19.0)	1,565 (7.0)	4,270 (19.0)	1,565 (7.0)
3/8	3/8	2 (51)	3,670 (16.3)	1,985 (8.8)	4,020 (17.9)	2,010 (8.9)	4,645 (20.7)	2,010 (8.9)	4,725 (21.0)	2,010 (8.9)	5,455 (24.3)	2,010 (8.9)
1/2	3/8	2 (51)	3,670 (16.3)	2,970 (13.2)	4,020 (17.9)	2,990 (13.3)	4,645 (20.7)	2,990 (13.3)	4,725 (21.0)	2,990 (13.3)	5,455 (24.3)	2,990 (13.3)

1. Tabulated load values are for anchors installed in uncracked concrete. Concrete compressive strength must be at a minimum at the time of installation.
2. Ultimate load capacities must be reduced by a minimum safety factor of 4.0 or greater to determine allowable working load.
3. The tabulated capacities are for the Hangermate+ anchors which must be checked against the steel strength of the corresponding threaded rod or bolt size and type, the lowest load level controls.

Allowable Load Capacities for Hangermate+ in Normal-Weight Concrete[1,2,3,4,5,6]

Nominal Anchor Size in.	Nominal Anchor Diameter (screw anchor body) in.	Minimum Nominal Embedment Depth in. (mm)	Minimum Concrete Compressive Strength									
			f'c = 2,500 psi (17.3 MPa)		f'c = 3,000 psi (20.7 MPa)		f'c = 4,000 psi (27.6 MPa)		f'c = 6,000 psi (41.4 MPa)		f'c = 8,000 psi (55.2 MPa)	
			Tension lbs (kN)	Shear lbs (kN)	Tension lbs (kN)	Shear lbs (kN)	Tension lbs (kN)	Shear lbs (kN)	Tension lbs (kN)	Shear lbs (kN)	Tension lbs (kN)	Shear lbs (kN)
1/4	1/4	1-5/8 (41)	605 (2.7)	370 (1.6)	635 (2.8)	380 (1.7)	695 (3.1)	380 (1.7)	695 (3.1)	380 (1.7)	695 (3.1)	380 (1.7)
3/8	1/4	1-5/8 (41)	605 (2.7)	390 (1.7)	635 (2.8)	390 (1.7)	695 (3.1)	390 (1.7)	695 (3.1)	390 (1.7)	695 (3.1)	390 (1.7)
		2-1/2 (64)	915 (4.1)	390 (1.7)	965 (4.3)	390 (1.7)	1,050 (4.7)	390 (1.7)	1,070 (4.8)	390 (1.7)	1,070 (4.8)	390 (1.7)
3/8	3/8	2 (51)	920 (4.1)	495 (2.2)	1,005 (4.5)	505 (2.2)	1,160 (5.2)	505 (2.2)	1,180 (5.2)	505 (2.2)	1,365 (6.1)	505 (2.2)
1/2	3/8	2 (51)	920 (4.1)	745 (3.3)	1,005 (4.5)	750 (3.3)	1,160 (5.2)	750 (3.3)	1,180 (5.2)	750 (3.3)	1,365 (6.1)	750 (3.3)

1. Tabulated load values are for anchors installed in uncracked concrete. Concrete compressive strength must be at the specified minimum at the time of installation.
2. Allowable load capacities are calculated using an applied safety factor 4.0.
3. Allowable load capacities must be multiplied by reduction factors when anchor spacing or edge distances are less than critical distances.
4. Linear interpolation may be used to determine allowable loads for intermediate embedments and compressive strengths.
5. For lightweight concrete, multiply the tabulated allowable load capacities by a reduction factor of 0.60.
6. The tabulated capacities are for the Hangermate+ anchors which must be checked against the steel strength of the corresponding threaded rod or bolt size and type, the lowest load level controls.

Allowable Load Capacities for Hangermate+ in Hollow-Core Concrete[1,2,3,4,5,6,7]

Nominal Anchor Size in.	Nominal Anchor Diameter (screw anchor body) in.	Minimum Nominal Embedment Depth in. (mm)	Minimum Concrete Compressive Strength					
			f'c = 5,000 psi (34.5 MPa)		f'c = 6,000 psi (41.4 MPa)		f'c = 8,000 psi (55.2 MPa)	
			Tension lbs (kN)	Shear lbs (kN)	Tension lbs (kN)	Shear lbs (kN)	Tension lbs (kN)	Shear lbs (kN)
1/4	1/4	1-1/2 (41)	695 (3.1)	380 (1.7)	695 (3.1)	380 (1.7)	695 (3.1)	380 (1.7)
3/8	1/4	1-1/2 (41)	695 (3.1)	390 (1.7)	695 (3.1)	390 (1.7)	695 (3.1)	390 (1.7)

1. Tabulated load values are for anchors installed in uncracked concrete. Concrete compressive strength must be at the specified minimum at the time of installation.
2. Allowable load capacities are calculated using an applied safety factor 4.0.
3. Allowable load capacities must be multiplied by reduction factors when anchor spacing or edge distances are less than critical distances.
4. Linear interpolation may be used to determine allowable loads for intermediate embedments and compressive strengths.
5. Hollow core concrete must have a minimum cover thickness of 1-1/2" below the core locations. where anchors are installed. Care must be taken to prevent damage to prestressed cables in the hollow core concrete panel during drilling and installation.
6. Tabulated capacties are for PFM2211100, PFM2211200 and PFM1421000 Hangermate+, as applicable.
7. The tabulated capacities are for the Hangermate+ anchors which must be checked against the steel strength of the corresponding threaded rod or bolt size and type, the lowest load level controls.

LOAD ADJUSTMENT FACTORS FOR NORMAL-WEIGHT CONCRETE

Edge Distance Reduction Factors - Tension (F_{NC})

Nominal Anchor Size (in)		1/4			3/8	1/2
Nominal Anchor Dia. (in) (Screw Anchor Body)		1/4	3/8	3/8	3/8	3/8
Nominal Embedment, h_{nom} (in)		1-5/8	1-5/8	2-1/2	2	2
Minimum Edge Distance, c_{min} (in)		1-1/2	1-1/2	1-1/2	1-1/2	1-1/2
Edge Distance (inches)	1-1/2	0.77	0.77	0.64	0.74	0.74
	1-3/4	0.83	0.83	0.67	0.79	0.79
	2	0.88	0.88	0.71	0.84	0.84
	2-1/4	0.94	0.94	0.75	0.89	0.89
	2-1/2	1.00	1.00	0.78	0.95	0.95
	2-3/4	1.00	1.00	0.82	1.00	1.00
	3	1.00	1.00	0.86	1.00	1.00
	3-1/2	1.00	1.00	0.93	1.00	1.00
	4	1.00	1.00	1.00	1.00	1.00

Edge Distance Reduction Factors - Shear (F_{VC})

Nominal Anchor Size (in)		1/4			3/8	1/2
Nominal Anchor Dia. (in) (Screw Anchor Body)		1/4	3/8	3/8	3/8	3/8
Nominal Embedment, h_{nom} (in)		1-5/8	1-5/8	2-1/2	2	2
Minimum Edge Distance, c_{min} (in)		1-1/2	1-1/2	1-1/2	1-1/2	1-1/2
Edge Distance (inches)	1-1/2	0.68	0.66	0.70	0.61	0.47
	1-3/4	0.79	0.77	0.82	0.72	0.55
	2	0.90	0.88	0.93	0.82	0.63
	2-1/4	1.00	0.99	1.00	0.92	0.70
	2-1/2	1.00	1.00	1.00	1.00	0.78
	2-3/4	1.00	1.00	1.00	1.00	0.86
	3	1.00	1.00	1.00	1.00	0.94
	3-1/4	1.00	1.00	1.00	1.00	1.00

Spacing Reduction Factors - Tension (F_{NS})

Nominal Anchor Size (in)		1/4			3/8	1/2
Nominal Anchor Diameter (in) (Screw Anchor Body)		1/4	3/8	3/8	3/8	3/8
Nominal Embedment, h_{nom} (in)		1-5/8	1-5/8	2-1/2	2	2
Minimum Spacing, s_{min} (in)		1-1/2	1-1/2	1-1/2	2	2
Spacing Distance (inches)	1-1/2	0.73	0.73	0.66	-	-
	1-3/4	0.77	0.77	0.68	-	-
	2	0.80	0.80	0.70	0.77	0.77
	2-1/4	0.83	0.83	0.72	0.80	0.80
	2-1/2	0.86	0.86	0.74	0.83	0.83
	2-3/4	0.89	0.89	0.76	0.86	0.86
	3	0.92	0.92	0.78	0.89	0.89
	3-1/2	0.99	0.99	0.82	0.94	0.94
	4	1.00	1.00	0.86	1.00	1.00
	4-1/2	1.00	1.00	0.90	1.00	1.00
	5	1.00	1.00	0.94	1.00	1.00
	5-1/2	1.00	1.00	0.97	1.00	1.00
	6	1.00	1.00	1.00	1.00	1.00

Spacing Reduction Factors - Shear (F_{VS})

Nominal Anchor Size (in)		1/4			3/8	1/2
Nominal Anchor Diameter (in) (Screw Anchor Body)		1/4	3/8	3/8	3/8	3/8
Nominal Embedment, h_{nom} (in)		1-5/8	1-5/8	2-1/2	2	2
Minimum Spacing, s_{min} (in)		1-1/2	1-1/2	1-1/2	2	2
Spacing Distance (inches)	1-1/2	0.61	0.61	0.62	-	-
	1-3/4	0.63	0.63	0.64	-	-
	2	0.65	0.65	0.66	0.64	0.60
	2-1/4	0.67	0.66	0.68	0.65	0.62
	2-1/2	0.69	0.68	0.69	0.67	0.63
	2-3/4	0.71	0.70	0.71	0.69	0.64
	3	0.73	0.72	0.73	0.70	0.66
	3-1/2	0.76	0.76	0.77	0.74	0.68
	4	0.80	0.79	0.81	0.77	0.71
	4-1/2	0.84	0.83	0.85	0.81	0.73
	5	0.88	0.87	0.89	0.84	0.76
	5-1/2	0.91	0.90	0.93	0.88	0.79
	6	0.95	0.94	0.97	0.91	0.81
	6-1/2	0.99	0.98	1.00	0.94	0.84
	7	1.00	1.00	1.00	0.98	0.86
	7-1/2	1.00	1.00	1.00	1.00	0.89
	8	1.00	1.00	1.00	1.00	0.92
	9	1.00	1.00	1.00	1.00	0.97
	10	1.00	1.00	1.00	1.00	1.00

TECHNICAL GUIDE – MECHANICAL ANCHORS ©2022 DEWALT – REV. I

STRENGTH DESIGN INFORMATION

Tension and Shear Design Information for Hangermate+ Anchor is in Concrete[1,2,9,11,12]

CODE LISTED
ICC-ES ESR-3889

Design Characteristic	Notation	Units	Nominal Anchor Size (inch)						
			1/4	3/8		3/8		3/8	1/2
Anchor category	1, 2 or 3	-	1	1		1		1	1
Coupler thread size (UNC)	-		1/4- 20	3/8-16		3/8-16		3/8-16	1/2-13
Coupler head style	-		Internal Thread	Internal Thread		External Thread		Internal Thread	Internal Thread
Nominal anchor diameter (screw anchor body)	d_a	in. (mm)	0.250 (6.4)	0.250 (6.4)		0.250 (6.4)		0.375 (9.5)	0.375 (9.5)
Minimum nominal embedment depth[4]	h_{nom}	in. (mm)	1-5/8 (41)	1-5/8 (41)	2-1/2 (64)	1-5/8 (41)	2-1/2 (64)	2 (51)	2 (51)
Effective embedment	h_{ef}	in. (mm)	1.20 (30)	1.20 (30)	1.94 (49)	1.20 (30)	1.94 (49)	1.33 (33)	1.33 (33)
Steel Strength in Tension (ACI 318-19 17.6.1, ACI 318-14 17.4.1 or ACI 318-11 D.5.1)									
Steel strength in tension	N_{sa}	lb (kN)	4,535 (20.2)	4,535 (20.2)		4,535 (20.2)		8,730 (38.8)	8,730 (38.8)
Reduction factor for steel strength[3,4]	ϕ	-	0.65						
Concrete Breakout Strength in Tension (ACI 318-19 17.6.2, ACI 318-14 17.4.2 or ACI 318-11 D.5.2)									
Critical edge distance (uncracked concrete only)	c_{ac}	in. (mm)	4.3 (110)	4.3 (110)	6.1 (156)	4.3 (110)	6.1 (156)	5.0 (127)	5.0 (127)
Effectiveness factor for uncracked concrete	k_{uncr}	-	27	27	24	27	24	30	30
Effectiveness factor for cracked concrete	k_{cr}	-	17	17		17		17	17
Modification factor for cracked and uncracked concrete[5]	$\Psi_{c,N}$	-	1.0						
Reduction factor for concrete breakout strength[3]	ϕ	-	0.65						
Pullout Strength in Tension (Non-Seismic Applications) (ACI 318-19 17.6.3, ACI 318-14 17.4.3 or ACI 318-11 D.5.3)									
Characteristic pullout strength, uncracked concrete (2,500 psi)[6,9]	$N_{p,uncr}$	lb (kN)	See Note 7	See Note 7		See Note 7		See Note 7	See Note 7
Characteristic pullout strength, cracked concrete (2,500 psi)[6,9]	$N_{p,cr}$	lb (kN)	765 (3.4)	765 (3.4)	1,415 (6.3)	765 (3.4)	1,415 (6.3)	See Note 7	See Note 7
Reduction factor for pullout strength[3]	ϕ	-	0.65						
Pullout Strength in Tension for Seismic Applications (ACI 318-19 17.10.3, ACI 318-14 17.2.3.3 Or ACI 318-11 D.3.3.3)									
Characteristic pullout strength, seismic (2,500 psi)[6,8,9]	$N_{p,eq}$	lb (kN)	360 (1.6)	360 (1.6)	1,170 (5.2)	360 (1.6)	1,170 (5.2)	900 (4.0)	900 (4.0)
Reduction factor for pullout strength[3]	ϕ	-	0.65						
Steel Strength in Shear (ACI 318-19 17.7.1, ACI 318-14 17.5.1 or ACI 318-11 D.6.1)									
Steel strength in shear[10]	V_{sa}	lb (kN)	800 (3.6)	1,360 (6.1)		1,360 (6.1)		1,295 (5.8)	1,295 (5.8)
Reduction factor for steel strength[3,4]	ϕ	-	0.60						
Steel Strength in Shear For Seismic Applications (ACI 318-19 17.10.3, ACI 318-14 17.2.3.3 or ACI 318-11 D.3.3.3)									
Steel strength in shear[10]	$V_{sa,eq}$	lb (kN)	600 (2.7)	695 (3.1)		695 (3.1)		800 (3.6)	800 (3.6)
Reduction factor for steel strength[3,4]	ϕ	-	0.60						
Concrete Breakout Strength in Shear (ACI 318-19 17.7.2, ACI 318-14 17.5.2 or ACI 318-11 D.6.2)									
Load bearing length of anchor	l_e	in. (mm)	1.20 (30)	1.20 (30)	1.94 (49)	1.20 (30)	1.94 (49)	1.33 (33)	1.33 (33)
Reduction factor for concrete breakout strength[3,4]	ϕ	-	0.70						
Pryout Strength in Shear (ACI 318-19 17.7.3, ACI 318-14 17.5.3 or ACI 318-11 D.6.3)									
Coefficient for pryout strength	k_{cp}	-	1	1	1	1	1	1	1
Reduction factor for pryout strength[3,4]	ϕ	-	0.70						

For SI: 1 inch = 25.4 mm; 1 ksi = 6.894 N/mm²; 1 ft-lb = 1.356 N-m; 1 lb = 0.0044 kN.

1. The data in this table is intended to be used with the design provisions of ACI 318 (-19 or -14) Chapter 17 or ACI 318-11 Appendix D, as applicable; for anchors resisting seismic load combinations the additional requirements of ACI 318-14 17.2.3 or ACI 318-11 D.3.3, as applicable, shall apply.
2. Installation must comply with manufacturer's published installation instructions and details.
3. The strength reduction factor applies when the load combinations from the IBC or ACI 318 are used and the requirements of ACI 318-19 17.5.3, ACI 318-14 17.3.3 or ACI 318-11 D.4.3, as applicable, are met. If the load combinations of ACI 318-11 Appendix C are used, the appropriate strength reduction factor must be determined in accordance with ACI 318-11 D.4.4.
4. The anchors are considered a brittle steel elements as defined by ACI 318 (-19 or -14) 2.3 or ACI 318-11 D.1.
5. Select the appropriate effectiveness factor for cracked concrete (k_{cr}) or uncracked concrete (k_{uncr}) and use $\psi_{c,N}$ = 1.0.
6. The characteristic pullout strength for concrete compressive strengths greater than 2,500 psi for 1/4-inch-diameter anchors (screw anchor body diameter) may be increased by multiplying the value in the table by $(f'c / 2{,}500)^{0.3}$ for psi or $(f'c / 17.2)^{0.3}$ for MPa. The characteristic pullout strength for concrete compressive strengths greater than 2,500 psi for 3/8-inch-diameter anchors (screw anchor body diameter) may be increased by multiplying the value in the table by $(f'c / 2{,}500)^{0.5}$ for psi or $(f'c / 17.2)^{0.5}$ for MPa.
7. Pullout strength does not control design of indicated anchors and does not need to be calculated for indicated anchor size and embedment.
8. Reported values for characteristic pullout strength in tension for seismic applications are based on test results per ACI 355.2, Section 9.5.
9. Reported values for steel strength in shear are based on test results per ACI 355.2, Section 9.4 and must be used for design in lieu of the calculated results using equation 17.7.1.2b in ACI 318-19, 17.5.1.2b in ACI 318-14 or equation D-29 in ACI 318-11 D.6.1.2.
10. Reported values for steel strength in shear are for seismic applications and based on tests in accordance with ACI 355.2, Section 9.6.
11. Anchors are permitted to be used in lightweight concrete in provided the modification factor λ_a equal to 0.8λ is applied to all values of $\sqrt{f'c}$ affecting N_n.
12. Hangermate+ shear values are for threaded rod or steel inserts with and ultimate strength, $F_u \geq 125$ ksi; threaded rod or steel inserts with an F_u less than 125 ksi are allowed provided the steel strength shear values are multiplied by the ratio of F_u (ksi) of the steel insert and 125 ksi.

Tension and Shear Design Information for Hangermate+ Anchor in the Soffit (Through the Underside) of Concrete-Filled Steel Deck Assemblies[1,2,3,4,5,6,9]

CODE LISTED
ICC-ES ESR-3889

Design Characteristic	Notation	Units	Nominal Anchor Size (inch)						
			1/4	3/8		3/8		3/8	1/2
Anchor category	1, 2 or 3	-	1	1		1		1	1
Coupler thread size (UNC)	-	in.	1/4-20	3/8-16		3/8-16		3/8-16	1/2-13
Coupler head style	-	-	Internal Thread	Internal Thread		External Thread		Internal Thread	Internal Thread
Nominal anchor diameter (screw anchor body)	d_a	in. (mm)	0.250 (6.4)	0.250 (6.4)		0.250 (6.4)		0.375 (9.5)	0.375 (9.5)
Minimum nominal embedment depth[4]	h_{nom}	in. (mm)	1-5/8 (41)	1-5/8 (41)	2-1/2 (64)	1-5/8 (41)	2-1/2 (64)	2 (51)	2 (51)
Effective embedment	h_{ef}	in. (mm)	1.20 (30)	1.20 (30)	1.94 (49)	1.20 (30)	1.94 (49)	1.33 (33)	1.33 (33)
Hangermate+ Anchors Installed into Minimum 3-7/8-inch-wide Deck Flute (See Figure 6A)									
Minimum concrete member thickness[7]	$h_{min,deck,total}$	lb (kN)	5-1/2 (140)	5-1/2 (140)		5-1/2 (140)		5-1/2 (140)	5-1/2 (140)
Pullout strength, uncracked concrete (3,000 psi)	$N_{p,deck,uncr}$	lb (kN)	1,430 (6.4)	1,430 (6.4)	2,555 (11.4)	1,430 (6.4)	2,555 (11.4)	2,275 (10.1)	2,275 (10.1)
Pullout strength, cracked concrete (3,000 psi)	$N_{p,deck,cr}$	lb (kN)	615 (2.7)	615 (2.7)	1,115 (5.0)	615 (2.7)	1,115 (5.0)	1,290 (5.1)	1,290 (5.1)
Pullout strength, seismic (3,000 psi)	$N_{p,deck,eq}$	lb (kN)	290 (1.3)	290 (1.3)	920 (4.1)	290 (1.3)	920 (4.1)	890 (4.0)	890 (4.0)
Reduction factor for pullout strength[3,4]	ϕ	-	0.65						
Steel strength in shear	$V_{sa,deck}$	lb (kN)	1,205 (5.4)	1,205 (5.4)		1,205 (5.4)		1,360 (6.0)	1,360 (6.0)
Steel strength in shear, seismic	$V_{sa,deck,eq}$	lb (kN)	615 (2.7)	615 (2.7)		615 (2.7)		965 (4.3)	965 (4.3)
Reduction factor for steel strength[3,4]	ϕ	-	0.60						
Hangermate+ Anchors Installed into Minimum 1-3/4-inch-wide Deck Flute (See Figure 6B)									
Minimum concrete member thickness[7]	$h_{min,deck,total}$	lb (kN)	4 (102)	4 (102)		4 (102)		4 (102)	4 (102)
Pullout strength, uncracked concrete (3,000 psi)	$N_{p,deck,uncr}$	lb (kN)	1,430 (6.4)	1,430 (6.4)	2,075 (9.2)	1,430 (6.4)	2,075 (9.2)	1,440 (6.4)	1,440 (6.4)
Pullout strength, cracked concrete (3,000 psi)	$N_{p,deck,cr}$	lb (kN)	615 (2.7)	615 (2.7)	910 (4.0)	615 (2.7)	910 (4.0)	815 (3.6)	815 (3.6)
Pullout strength, seismic (3,000 psi)	$N_{p,deck,eq}$	lb (kN)	290 (1.3)	290 (1.3)	750 (3.3)	290 (1.3)	750 (3.3)	565 (2.5)	565 (2.5)
Reduction factor for pullout strength[8]	ϕ	-	0.65						
Steel strength in shear	$V_{sa,deck}$	lb (kN)	815 (3.6)	815 (3.6)		815 (3.6)		1,110 (4.9)	1,110 (4.9)
Steel strength in shear, seismic	$V_{sa,deck,eq}$	lb (kN)	415 (1.8)	415 (1.8)		415 (1.8)		790 (3.5)	790 (3.5)
Reduction factor for steel strength[8]	ϕ	-	0.60						

For SI: 1 inch = 25.4 mm, 1 ft-lb = 1.356 N-m, 1 psi = 0.0069 N/mm² (MPa).

1. Installation must comply with manufacturer's published installation instructions and details.
2. Values for $N_{p,deck}$ and $N_{p,deck,cr}$ are for sand-lightweight concrete (f'c, min = 3,000 psi) and additional lightweight concrete reduction factors need not be applied. In addition, evaluation for the concrete breakout capacity in accordance with ACI 318-19 17.6.2, ACI 318-14 17.4.2 or ACI 318 D.5.2, as applicable, is not required for anchors installed in the deck soffit (through underside).
3. Values for $N_{p,deck,eq}$ are applicable for seismic loading.
4. The characteristic pullout strength for concrete compressive strengths greater than 3,000 psi for 1/4-inch-diameter anchors (screw anchor body diameter) may be increased by multiplying the value in the table by $(f'c / 3{,}000)^{0.3}$ for psi or $(f'c / 17.2)^{0.3}$ for MPa. The characteristic pullout strength for concrete compressive strengths greater than 3,000 psi for 3/8-inch-diameter anchors (screw anchor body diameter) may be increased by multiplying the value in the table by $(f'c / 3{,}000)^{0.5}$ for psi or $(f'c / 17.2)^{0.5}$ for MPa. For all design cases $\Psi_{c,P} = 1.0$.
5. Shear loads for anchors installed through steel deck into concrete may be applied in any direction.
6. Values of $V_{sa,deck}$ and $V_{sa,deck,eq}$ are for sand-lightweight concrete and additional lightweight concrete reduction factors need not be applied. In addition, evaluation for the concrete breakout capacity in accordance with ACI 318-19 17.7.2, ACI 318-14 17.5.2 or ACI 318-11 D.6.2, as applicable, and the pryout capacity in accordance with ACI 318-19 17.7.2, ACI 318-14 17.5.3 or ACI 318-11 D.6.3, as applicable, are not required for anchors installed in the soffit (through underside).
7. The minimum concrete member thickness, $h_{min,deck,total}$, is the minimum overall thickness of the concrete-filled steel deck (depth and topping thickness).
8. All values of ϕ were determined from the load combinations of IBC Section 1605.2, 318 (-19 or -14) Section 5.3 or ACI 318 Section 9.2. If the load combinations of ACI 318 Appendix C are used, then the appropriate value of ϕ must be determined in accordance with ACI 318-11 D.4.4.
9. Hangermate+ shear values are for threaded rod or steel inserts with and ultimate strength, $F_u \geq 125$ ksi; threaded rod or steel inserts with an F_u less than 125 ksi are allowed provided the steel strength shear values are multiplied by the ratio of F_u (ksi) of the steel insert and 125 ksi.

DESIGN STRENGTH TABLES (SD)

Tension and Shear Design Strength Cracked Concrete[1,2,3,4,5,6,7,8]

Nominal Anchor Diameter			Nominal Embed. Depth h_{nom} (in.)	Effective Embed. Depth h_{ef} (in.)	Minimum Concrete Compressive Strength									
					f'c = 2,500 psi		f'c = 3,000 psi		f'c = 4,000 psi		f'c = 6,000 psi		f'c = 8,000 psi	
Coupler Thread Size (UNC)	Coupler Head Style	Screw Anchor Body			øNn Tension (lbs.)	øVn Shear (lbs.)	øNn Tension (lbs.)	øVn Shear (lbs.)	øNn Tension (lbs.)	øVn Shear (lbs.)	øNn Tension (lbs.)	øVn Shear (lbs.)	øNn Tension (lbs.)	øVn Shear (lbs.)
1/4 - 20	Internal Thread	1/4	1-5/8	1.20	495	515	525	515	575	515	645	515	705	515
3/8 - 16	Internal Thread	1/4	1-5/8	1.20	495	780	525	815	575	815	645	815	705	815
			2-1/2	1.94	920	815	970	815	1,060	815	1,195	815	1,305	815
3/8 - 16	External Thread	1/4	1-5/8	1.20	495	780	525	815	575	815	645	815	705	815
			2-1/2	1.94	920	815	970	815	1,060	815	1,195	815	1,305	815
3/8 - 16	Internal Thread	3/8	2	1.33	845	775	930	775	1,070	775	1,315	775	1,515	775
1/2 - 13	Internal Thread	3/8	2	1.33	845	915	930	1,000	1,070	1,140	1,315	1,140	1,515	1,140

☐ - Anchor Pullout/Pryout Strength Controls ☐ - Concrete Breakout Strength Controls ■ - Steel Strength Controls

Tension and Shear Design Strength Uncracked Concrete[1,2,3,4,5,6,7]

Nominal Anchor Diameter			Nominal Embed. Depth h_{nom} (in.)	Effective Embed. Depth h_{ef} (in.)	Minimum Concrete Compressive Strength									
					f'c = 2,500 psi		f'c = 3,000 psi		f'c = 4,000 psi		f'c = 6,000 psi		f'c = 8,000 psi	
Coupler Thread Size (UNC)	Coupler Head Style	Screw Anchor Body			øNn Tension (lbs.)	øVn Shear (lbs.)	øNn Tension (lbs.)	øVn Shear (lbs.)	øNn Tension (lbs.)	øVn Shear (lbs.)	øNn Tension (lbs.)	øVn Shear (lbs.)	øNn Tension (lbs.)	øVn Shear (lbs.)
1/4 - 20	Internal Thread	1/4	1-5/8	1.20	1,155	515	1,265	515	1,460	515	1,785	515	2,065	515
3/8 - 16	Internal Thread	1/4	1-5/8	1.20	1,155	815	1,265	815	1,460	815	1,785	815	2,065	815
			2-1/2	1.94	2,110	815	2,310	815	2,665	815	2,950	815	2,950	815
3/8 - 16	External Thread	1/4	1-5/8	1.20	1,155	815	1,265	815	1,460	815	1,785	815	2,065	815
			2-1/2	1.94	2,110	815	2,310	815	2,665	815	2,950	815	2,950	815
3/8 - 16	Internal Thread	3/8	2	1.33	1,495	775	1,640	775	1,890	775	2,315	775	2,675	775
1/2 - 13	Internal Thread	3/8	2	1.33	1,495	1,140	1,640	1,140	1,890	1,140	2,315	1,140	2,675	1,140

☐ - Anchor Pullout/Pryout Strength Controls ☐ - Concrete Breakout Strength Controls ■ - Steel Strength Controls

1- Tabular values are provided for illustration and are applicable for single anchors installed in normal-weight concrete with minimum slab thickness, $h_a = h_{min}$, and with the following conditions:
   - c_{a1} is greater than or equal to the critical edge distance, c_{ac} (table values based on $c_{a1} = c_{ac}$).
   - c_{a2} is greater than or equal to 1.5 times c_{a1}.

2- Calculations were performed according to ACI 318 (-19 or -14) Chapter 17. The load level corresponding to the controlling failure mode is listed. (e.g. For tension: steel, concrete breakout and pullout; For shear: steel, concrete breakout and pryout). Furthermore, the capacities for concrete breakout strength in tension and pryout strength in shear are calculated using the effective embedment values, h_{ef}, for the selected anchors as noted in the design information tables. Please also reference the installation specifications for more information.

3- Strength reduction factors (ø) were based on ACI 318 (-19 or -14) Section 5.3 for load combinations. Condition B is assumed.

4- Tabular values are permitted for static loads only, seismic loading is not considered with these tables.

5- For designs that include combined tension and shear, the interaction of tension and shear loads must be calculated in accordance with ACI 318 (-19 or -14) Chapter 17.

6- Interpolation is not permitted to be used with the tabular values. For intermediate base material compressive strengths please see ACI 318 (-19 or -14) Chapter 17. For other design conditions including seismic considerations please see ACI 318 (-19 or -14) Chapter 17.

7- Hangermate+ shear values are for threaded rod or steel inserts with and ultimate strength, $F_u \geq 125$ ksi; threaded rod or steel inserts with an F_u less than 125 ksi are allowed provided the steel strength shear values are multiplied by the ratio of F_u (ksi) of the steel insert and 125 ksi.

8- For seismic design in accordance with ACI 318, the tabulated tension design strengths in cracked concrete for concrete breakout and pullout strength must be multiplied by a factor of 0.75.

ORDERING INFORMATION

Catalog Number	Screw Size	Hang	Rod Size	Socket Size	Pack Qty.	Carton Qty.	Suggested Accessories	
							SDS+ Carbide Drill Bits	Hangermate+ Driver
Hangermate+ Internal Thread (UNC)							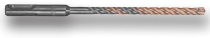	
PFM2211100	1/4" x 1-5/8"	Vertical	1/4"	3/8"	25	125	DW5517, DW5417	PFM1491050
PFM2211200	1/4" x 1-5/8"	Vertical	3/8"	1/2"	25	125	DW5517, DW5417	PFM1491100
PFM2211250	1/4" x 2-1/2"	Vertical	3/8"	1/2"	25	125	DW5517, DW5417	PFM1491100
PFM2211260	3/8" x 1-5/8"	Vertical	3/8"	1/2"	25	125	DW5527, DW5427	PFM1491100
PFM2211270	3/8" x 2"	Vertical	3/8"	1/2"	25	125	DW5527, DW5427	PFM1491100
PFM2211280	3/8" x 2"	Vertical	1/2"	11/16"	20	100	DW5527, DW5427	-
Hangermate+ External Thread (UNC)								
PFM1421000	1/4" x 1-5/8"	Vertical	3/8"	1/2"	25	125	DW5517, DW5417	DWMT19052B
PFM1421050	1/4" x 2-1/2"	Vertical	3/8"	1/2"	25	125	DW5517, DW5417	DWMT19052B

The published size includes the diameter and length of the anchor measured from under the head.
Shaded catalog numbers denote sizes which are less than the minimum standard anchor length for Strength Design.

Suggested Tools

20V Max* SDS+ Rotary Hammers

Option 1

DCH172
ATOMIC™ 20V MAX* 5/8 in Brushless Cordless SDS Plus Rotary Hammer

DWH200
Dust Extraction Tube Kit with Hose

DWH161
20V MAX* Brushless Cordless Universal Dust Extractor

Option 2

DCH273
20V MAX* XR 1" Brushless L-Shape Rotary Hammer

DWH303
Onboard Dust Extractor for 1" SDS+ Rotary Hammer

Option 3

DCH133
20V MAX* 1 in Brushless Cordless SDS PLUS D-Handle Rotary Hammer Kit

DWH200
Dust Extraction Tube Kit with Hose

DWH161
20V MAX* Brushless Cordless Universal Dust Extractor

20V Max* Impact Drivers

DCF887
20V MAX* XR 1/4"3-Speed Impact Driver

DCF850
Atomic 20V MAX* XR 1/4"3-Speed Impact Driver

20V Max* Impact Wrenches

DCF921
Atomic 20V MAX* 1/2" Impact Wrench

DCF923
Atomic 20V MAX* 3/8" Impact Wrench